UNIVERSAL 32

The sedimentation of cells, bacteria, yeasts, DNA/RNA and protein precipitates is workaday routine in basic research and R&D laboratories of the pharmaceutical and biotechnical industry. A centrifuge, therefore, simply needs to be "universal".

UNIVERSAL 32 means perfectly smooth running at both high and low speeds, versatile and easily exchangeable accessories and small footprint.

This is why UNIVERSAL 32 centrifuges are requisite in every laboratory.

In the low speed range (max. RCF 4,193) the UNIVERSAL 32/32 R accommodate standard tubes up to a volume of 100 ml, microtitre plates, Falcon®* tubes, blood collection tubes and cyto accessories.

Microlitre tubes can be accelerated to a max. RCF of 23,907.

Centrifuge tubes taking higher volumes (up to 85 ml) also profit from the extraordinary motor power of the UNIVERSAL 32/32 R: At an RCF of 9,418 bacteria and yeasts sediment fast and easily.

UNIVERSAL 32 centrifuges in brief

Performance

High RCF
85 ml tubes up to an RCF of 9,418, microlitre tubes up to an RCF of 23,907.

Extremely short run-up and run-down times
also with rotors reaching higher speeds.

Efficient cooling
temperature in the UNIVERSAL 32 R is controllable within a range of -20°C to +40°C.
On option, the UNVIERSAL 32 R is also available in a heating version with temperature control from -20°C to +90°C and a heating/cooling version with temperature control from -20°C to +60°C.

Extensive range of accessories
comprising swing-out rotors, angle rotors, hygienic buckets, and adapters for a large variety of centrifuge tubes.

Technology

Special lid locking device
effortless closing and opening of the lid with one hand.

Ergonomically arranged controls and displays

Viewing port in the lid

3 complete running programmes can be stored and recalled

Safety

Metal housing and lid

Centrifuging chamber of stainless steel

Lid dropping protection

Lid locking and holding during rotor run

Emergency lid lock release

Motor overheating protection

Chamber overheating protection with UNIVERSAL 32 R

Imbalance switch-off

Easily exchangeable rotors

Automatic rotor recognition

QUALITY MANAGEMENT SYSTEMS GLC ISO 9001 Zertifikat Nr. QS-681 HH

Hettich manufactures high quality centrifuges.

All stages from design to end product are continually subjected to strictest controls.

Evidence of conformity with national and international regulations such as IEC 1010-2.2 and EC standards is provided by corresponding certificates.

Of course, Hettich centrifuges are CE marked.

The ISO 9001 certificate accredited to the entire company proves the extreme care and responsibility Hettich puts into the manufacture of centrifuges and their accessories.

Therefore, Hettich centrifuges are known for safety and reliability all over the world.

DJB Labcare - The UK's Leading Centrifuge Specialist
info@djblabcare.co.uk www.djblabcare.co.uk
☎ 01908 612598

* Registered trademark of Becton Dickinson

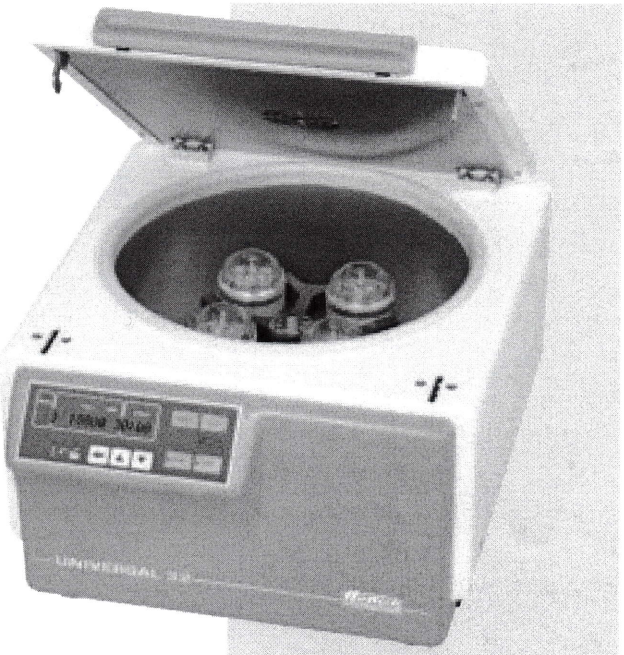

UNIVERSAL 32 R
refrigerated benchtop centrifuge
dimensions (H x W x D): 300 x 420 x 660 mm
Cat.-No. **1610**

UNIVERSAL 32
benchtop centrifuge
dimensions (H x W x D):
300 x 420 x 490 mm
Cat.-No. **1605**

The fully developed up-to-date N control panel meets the requirements of the users and is extremely easy to operate.

Entry of the parameters is fast, precise and convenient with selector keys on the water-protected foil keypad.

The large display is well readable. During centrifugation the actual values of the parameters are indicated.

The parameters remain in the memory even after the centrifuge has been switched off.

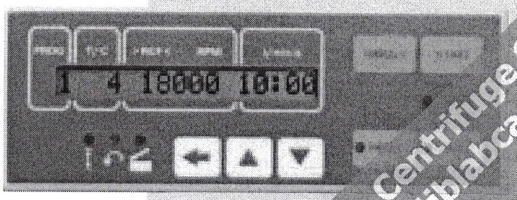

Speed RPM: Input in increments of 10.

Relative centrifugal force RCF: Input in increments of 10.

Change-over RPM/RCF: By entering the rotor radius r/mm the centrifuge calculates and indicates speed or RCF.

Running time t: Input in minutes and seconds, max. 99 min, 59 sec.

Run-up/run-down times: Input of acceleration and braking ramps in levels 1 – 9 or unbraked run-down. 加速/減速時間：可選擇1-9段加速和剎車等級，也可選擇無剎車自然減速。

Temperature T: With refrigerated models input in increments of 1 °C within a range of -20 °C to +40 °C.

Memory: 3 complete running programmes can be stored and recalled.

Impulse key: For short centrifuging operations. The rotor spins at the preselected speed or RCF as long as the key remains pressed.

DJB Labcare - The UK's Leading Centrifuge Specialist
info@djblabcare.co.uk www.djblabcare.co.uk
☎ 01908 612598

UNIVERSAL 32

Hettich
ZENTRIFUGEN

DJB Labcare - The UK's Leading Centrifuge Specialist
info@djblabcare.co.uk www.djblabcare.co.uk
01908 612598

Benchtop
Centrifuges,
non-refrigerated
and refrigerated

Accessories

High performance and large capacity on very little space

... regarding tubes

28 x 15 ml or 4 x 100 ml standard tubes,
24 hematocrit capillaries,
8 x 15/50 ml Falcon® 2) tubes,
4 microtitre plates or 2 culture plates,
8 slide carriers for cyto preparations,
28 Monovettes® 3) or 20 Vacutainers® 2),
6 x 85 ml Nalgene® 4) tubes,
30 x 1.5/2.0 ml microlitre tubes.

... regarding rotors

rotor for hygienic suspensions, max. RCF 2,655,
rotor for Falcon® 2) tubes, max. RCF 3,857,
rotor for microtitre or culture plates, max. RCF 2,093,
rotor for 8 cyto suspensions, max. RCF 2,218,
angle rotor for 6 x 85 ml Nalgene® 4) tubes, max. RCF 9,418,
angle rotors for 12 or 30 microlitre tubes of 0.4 - 2.0 ml, max. RCF 23,907.

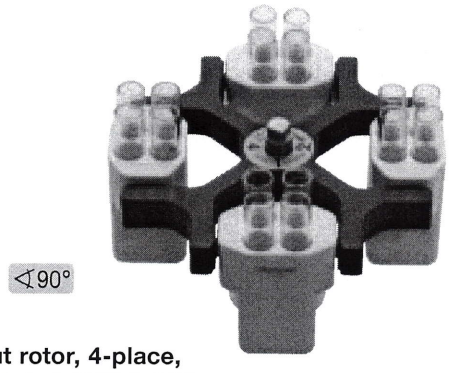

Swing-out rotor, 4-place, n = 4,000 min^{-1}, RCF 2,665

Cat.-No. **1624** without buckets

illustrated with suspensions No.1369

capacity in ml	1.5	2.0	1	3	4
dimensions Ø x L mm	11 x 38	11 x 38	6x45 rhesus	10 x 60	12 x 60
Cat.-No.	**2078**	**0536**	**-**	**-**	**-**
Cat.-No. **1366**					
Cat.-No.	**5277**	**5277**	**1357**	**1327**	**1326**
tubes per rotor	36	36	120	48	
RCF	1,968	1,968	1,950	1,932	
radius in mm	110	110	109	108	
run-up in sec	30				
run-down in sec	36 380				
temperature °C 1)	- 15				

capacity in ml	5	5	7	9	15	20	45	50	9	15	25	50
dimensions Ø x L mm	12 x 75	12 x 75	12 x 100	14 x 100	17 x 100	21 x 100	31 x 100	34 x 100	14 x 100	17 x 100	24 x 100	34 x 100
Cat.-No.	**-**	**-**	**0578**	**0500**	**0507**	**-**	**-**	**0521**	**0500**	**0507**	**0519**	**0521**
Cat.-No. **1624**	with decanting aid		with decanting aid						use with insert 0701			
Cat.-No.	**1369-91**	**1372**	**1369-92**	**1370**	**1369**	**1346**	**1345**	**1308**	**1741**	[illegible]	[illegible]	**1746**
tubes per rotor	16	68	16	20	16	8	4	4	40	[illegible]	[illegible]	4
RCF	2,236	2,164	2,361	2,361	2,361	2,361	2,451	2,325	[illegible]	[illegible]	[illegible]	
radius in mm	125	121	132	132	132	132	137	130	[illegible]	[illegible]	137	
run-up in sec	30								[illegible]			
run-down in sec	36 380								[illegible]	450		
temperature °C 1)	- 15								[illegible]	- 5		

braked run-down at level 9
unbraked run-down

1) Lowest attainable temperature in the UNIVERSAL 32 R at max. speed.

Adapters for additional tubes on request

Please take care not to exceed the tubes' max. permissible RCF. For glass tubes the max. RCF is 4,000

DJB Labcare - The UK's Leading Centrifuge Specialist
info@djblabcare.co.uk www.djblabcare.co.uk
01908 612598

2) Registered trademark of Becton Dickinson
3) Registered trademark of Sarstedt
4) Registered trademark of Nalge Nunc International

Swing-out rotor, 4-place, n = 4,000 min⁻¹, RCF 2,665

Cat.-No. **1624** without buckets

illustrated with buckets No. 1381 and hygienic lids No. 1382

Hettich rotors are designed for continuous duty and long service life.

Customers´ requirements and demands on safety as well as easy handling have been considered.

The automatic rotor recognition system defines the max. speed of each rotor so that it cannot be stressed beyond its design limits.

capacity in ml	1.5	2.0	1	3	6 / 7	9	10	15	25	30	50	50	85	100
dimensions Ø x L mm	11 x 38	11 x 38	6x45 rhesus	10 x 60	12 x 82/100	14 x 100	16 x 80	17 x 100	24 x 100	26 x 95	29 x 107	34 x 100	38 x 106	44 x 100
Cat.-No.	**2078**	**0536**	**–**	**–**	**0501/0578**	**0500**	**–**	**0507**	**0519**	**0545**	**0546**	**0521**	**0547**	**0526**
lid No. 1382 Cat.-No. **1381**														rubber insert
Cat.-No.	**1351**	**1351**	**1339**	**1343**	**1383**	**1329**	**1348**	**1329**	**1330**	**4417**	**4416**	**1331**	**1396**	**0761**
tubes per rotor	20	20	108	36	20	16	16	16	4	4	4	4	4	4
RCF	2,451	2,451	2,594	2,630	2,558	2,540	2,522	2,540	2,433	2,451	2,630	2,397	2,612	2,576
radius in mm	137	137	145	147	143	142	141	142	136	137	147	134	146	144
run-up in sec	30													
run-down in sec	◘ 36 [◯] 380													
temperature °C [1]	- 15													

capacity in ml	15	50	12	25	30	50	1.6 - 7	4 - 10	1.1 - 1.4	2.7 - 5	2.6 - 4.9	4 - 8.2	9 -10	30 ml
dimensions Ø x L mm	17 x 120	29 x 115	17 x 100	25 x 90	25 x 110	29 x 115	13x75/100	16x75/100	8 x 66	11 x 66/92	13x65/90	15 x 75/92	16 x 92	44 x 105
Cat.-No.	**0509**	**0513**	**–**	**–**	**–**	**–**	**blood collection tubes**							**0534**
lid No. 1382 Cat.-No. **1381**														
Cat.-No.	**1347**	**1384**	**6311**	**1363**	**1365**	**6318**	**1383**	**1348**	**1457**	**1383**	**1383**	**1459**	**1459**	**0765**
tubes per rotor	4	4	4	4	4		20	16	28	20	20	16	16	4
RCF	2,665		2,683	2,361	2,683		2,558	2,522	2,576	2,558	2,558	2,576	2,576	2,558
radius in mm	149		150	132	150		143	141	144	143	143	144	144	143
run-up in sec	30													22
run-down in sec	◘ 36 [◯] 380													◘ 36 [◯] 380
temperature °C [1]	- 15													-15

A rubber stopper for closing the tube is available with Cat.-No. 0535

◘ braked run-down at level 9

[◯] unbraked run-down

[1] Lowest attainable temperature in the UNIVERSAL 32 R at max. speed.

Adapters for additional tubes on request

Please take care not to exceed the tubes' max. permissible RCF. For glass tubes the max. RCF is 4,000

DJB Labcare - The UK's Leading Centrifuge Specialist
info@djblabcare.co.uk www.djblabcare.co.uk
01908 612598

Accessories

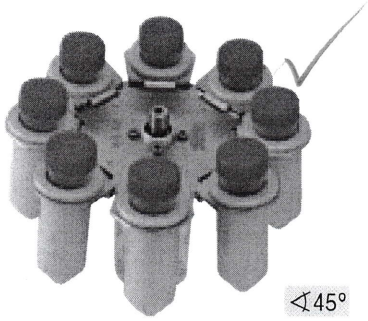

Swing-out rotor, 8-place,
n = 5,000 min⁻¹, RCF 3,857

Cat.-No. **1617** with suspensions

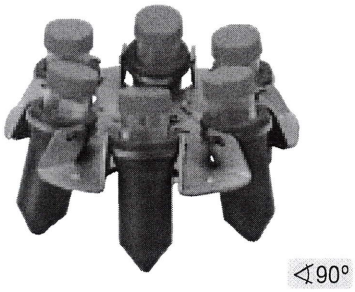

Swing-out rotor, 6-place,
n = 4,000 min⁻¹, RCF 2,701

Cat.-No. **1619** with suspensions

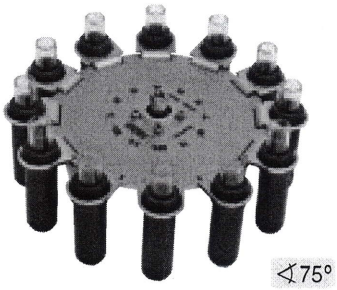

Swing-out rotor, 12-place,
n = 4,500 min⁻¹, RCF 3,396

Cat.-No. **1628** without suspensions

illustrated with suspensions No. 1621

capacity in ml	15	50
dimensions Ø x L mm	17 x 120	29 x 115
Cat.-No.	**0509**	**0513**
Cat.-No. **1617**		
Cat.-No.	**1462**	**–**
tubes per rotor	8	
RCF	3,857	
radius in mm	138	
run-up in sec	32	
run-down in sec	▢ 34 [◯] 350	
temperature °C [1]	- 8	

capacity in ml	15	50
dimensions Ø x L mm	17 x 120	29 x 115
Cat.-No.	**0509**	**0513**
Cat.-No. **1619**		
Cat.-No.	**1462**	**–**
tubes per rotor	6	
RCF	2,701	
radius in mm	151	
run-up in sec	30	
run-down in sec	▢ 34 [◯] 250	
temperature °C [1]	- 12	

capacity in ml	5	10	15	1.6-5
dimensions Ø x L mm	12 x 75	17 x 70	17 x 100	13 x 75
Cat.-No.	**–**	**2079**	**0507**	blood collection tube
Cat.-No. **1628**				
Cat.-No.	**1127**	**1122**	**1621**	**1127**
tubes per rotor	12	12	12	12
RCF	2,807	2,853	3,396	2,807
radius in mm	124	126	150	124
run-up in sec	32			
run-down in sec	▢ 34 [◯] 250			
temperature °C [1]	- 20		- 15	-20

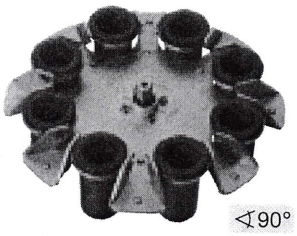

Swing-out rotor, 8-place,
n = 4,000 min⁻¹, RCF 2,415

Cat.-No. **1611** without suspensions

illustrated with suspensions No. 1644

capacity in ml	5	10	10	15	2.6-2.9	4-5.5	1.6-5	4-7
dimensions Ø x L mm	12 x 75	17 x 70	13 x 100	17 x 100	13 x 65	15 x 75	13 x 75	13 x 100
Cat.-No.	**–**	**2079**	**–**	**0507**	blood collection tubes			
Cat.-No. **1611**								
Cat.-No.	**1131**	**1132**	**1643**	**1644**	**1131**	**1132**	**1643**	**1644**
tubes per rotor	8		8		8			
RCF	1,914		2,415		1,914			2,415
radius in mm	107		135		107			135
run-up in sec	23		25		23			25
run-down in sec	▢ 31 [◯] 100		▢ 32 [◯] 120		▢ 31 [◯] 100			32 / 120
temperature °C [1]	- 20		- 18		- 20			- 18

▢ braked run-down at level 9
[◯] unbraked run-down

[1] Lowest attainable temperature in the UNIVERSAL 32 R at max. speed.

Adapters for additional tubes on request

Please take care not to exceed the tubes' max. permissible RCF. For glass tubes the max. RCF is 4,000

DJB Labcare - The UK's Leading Centrifuge Specialist
info@djblabcare.co.uk www.djblabcare.co.uk 01908 612596

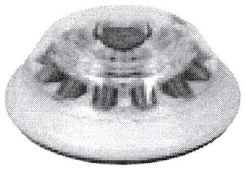

∢45°

Angle rotor, 12-place,
n = 18,000 min⁻¹, RCF 23,907

Cat.-No. **1612**

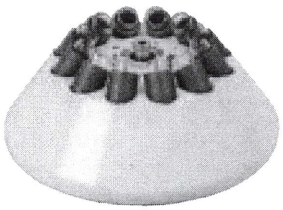

∢35°

Angle rotor, 12-place,
n = 6,000 min⁻¹, RCF 4,105

Cat.-No. **1613**

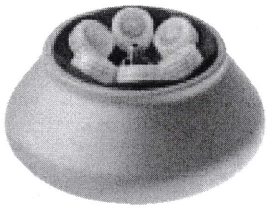

∢35°

Angle rotor, 6-place,
n = 9,000 min⁻¹, RCF 9,418

Cat.-No. **1620 A**

capacity in ml	0.4	0.5	0.8	1.5	2.0
dimensions Ø x L mm	6 x 45	8 x 30	8 x 45	11 x 38	11 x 38
Cat.-No.	–	–	–	**2078**	**0536**
Cat.-No. **1612**				with high speeds we recommend to use adapter No. 2031	
Cat.-No.	**2024**	**2023**	**2023**	–	–
tubes per rotor	12				
RCF	23,907				
radius in mm	66				
run-up in sec	14				
run-down in sec	▢ 18 [◯] 280				
temperature °C [1]	- 8				

capacity in ml	5	15	15
dimensions Ø x L mm	12 x 75	17 x 100	17 x 120
Cat.-No.	–	**0507**	**0509**
Cat.-No. **1613**		[3]	
Cat.-No.	**1056**	–	–
tubes per rotor	12	12	6
RCF	3,461	4,105	
radius in mm	86	102	
run-up in sec	19		
run-down in sec	▢ 26 [◯] 580		
temperature °C [1]	- 18		

capacity in ml	1.5	2.0	10	15	30	50	50	85	9 - 10	15	50	50
dimensions Ø x L mm	11 x 38	11 x 38	16 x 80	17 x 100	26 x 95	29 x 107	35 x 105	38 x 106	16 x 92	17 x 120	29 x 115	29 x 115
Cat.-No.	**2078**	**0536**	–	**0507**	**0545**	**0546**	**0548**	**0547**	blood collection tube	**0509**	**0513**	**0513**
Cat.-No. **1620 A**				[3]								
Cat.-No.	**1449**	**1449**	**1448**	**1451**	**1447**	**1446**	**1463**	–	**1451**	[illegible]	[illegible]	**1646**
tubes per rotor	24	24	12	6	6	6	6	6	6	[illegible]	[illegible]	6
RCF	9,146	9,146	8,784	8,784	8,603	9,056	9,327	9,418	8,784	[illegible]	8,965	
radius in mm	101	101	97	97	95	100	103	104	97	[illegible]	99	
run-up in sec	50											
run-down in sec	▢ 56 [◯] 1260											
temperature °C [1]	- 6											

▢ braked run-down at level 9
[◯] unbraked run-down

[1] Lowest attainable temperature in the UNIVERSAL 32 R at max. speed.

[2] Adapter set, 6-place, for conical 50 ml tubes with screw cap

Adapters for additional tubes on requests

Please take care not to exceed the tubes' max. permissible RCF. For glass tubes the max. RCF is 4,000

DJB Labcare - The UK's Leading Centrifuge Specialist
info@djblabcare.co.uk www.djblabcare.co.uk
01908 612598

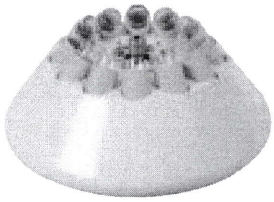

◁35°

Angle rotor, 12-place,
n = 12,000 min⁻¹, RCF 16,421,
UNIVERSAL 32 R
n = 9,000 min⁻¹, RCF 9,237,
UNIVERSAL 32

Cat.-No. **1615**

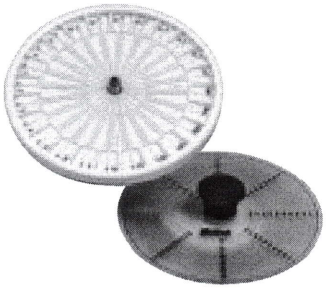

Hematocrit rotor, 24-place,
n = 15,000 min⁻¹, RCF 21,382,
UNIVERSAL 32 R
n = 9,000 min⁻¹, RCF 7,697,
UNIVERSAL 32

Cat.-No. **1650**

The hematocrit rotor is segmented into 24 chambers,

each chamber containing one capillary. In case a capillary breaks, the fragments stay in the chamber and will not affect other capillaries.

The lid of the rotor is evaluation disc and cover in one.

Advantage: The hematocrit value can be determined fast and conveniently right after centrifugation.

capacity in ml	5	15	5	15
dimensions Ø x L mm	12 x 75	17 x 100	12 x 75	17 x 100
Cat.-No.	–	**0507**	–	**0507**
		3)		3)
	UNIVERSAL 32 R		UNIVERSAL 32	
Cat.-No. **1615**				
Cat.-No.	**1056**	–	**1056**	–
tubes per rotor	12	12	12	12
RCF	13,845	16,421	7,788	9,237
radius in mm	86	102	86	102
run-up in sec	41		41	
run-down in sec	◘46 [◯]780		◘43 [◯] 625	
temperature °C 1)	+ 4		–	

	capillaries	capillaries, mylar-coated	capillaries, self-sealing	capillaries	capillaries, mylar-coated	capillaries, self-sealing
Cat.-No.	**2074**	**1072**	**1071**	**2074**	**1072**	**1071**
	UNIVERSAL 32 R			UNIVERSAL 32		
Cat.-No. **1650**	sealing putty			sealing putty		
Cat.-No.	**2077**	–		**2077**	–	
capillaries per rotor	24			24		
RCF	21,382			7,697		
radius in mm	85			85		
run-up in sec	15			14		
run-down in sec	◘19 [◯]185			◘18 [◯]160		
temperature °C 1)	-5			–		

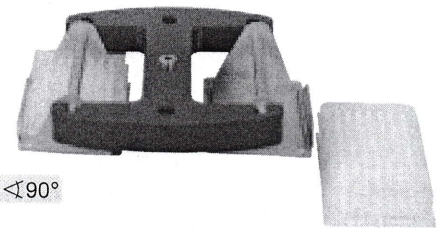

◁90°

Swing-out rotor, 2-place,
n = 4,000 min⁻¹, RCF 2,093

Cat.-No. **1622** with suspensions

	Microtitre Plate	Culture Plate
Cat.-No. **1622**		
Cat.-No.	–	
plates per rotor	4	2
RCF	2,093	
radius in mm	117	
run-up in sec	30	
run-down in sec	◘36 [◯]450	
temperature °C 1)	-12	

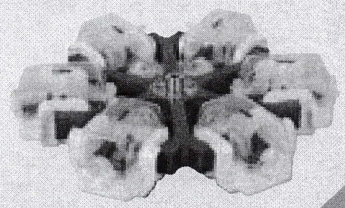

Cyto rotor, 6-place

Cat.-No. **1626** without suspensions
illustrated with suspensions No.1660 and lids No.1661

More information is available in a detailed Cyto brochure. Please ask for it!

◘ braked run-down at level 9
[◯] unbraked run-down

1) Lowest attainable temperature in the UNIVERSAL 32 R at max. speed.

3) Adapter for additional tubes on request

Please take care not to exceed the tubes' max. permissible RCF. 3) For glass tubes the max. RCF is 4,000

DJB Labcare - The UK's Leading Centrifuge Specialist
info@djblabcare.co.uk www.djblabcare.co.uk
01908 612598

Accessories for UNIVERSAL 32 R only

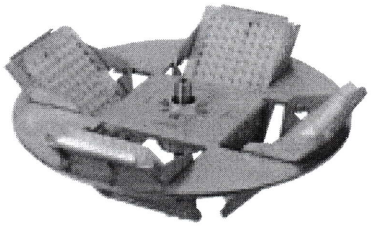

∢90°

Swing-out rotor, 4-place,
n = 4,000 min⁻¹, RCF 1,896

Cat.-No. **1645** without suspensions
illustrated with suspensions No. 4345

∢45°

Angle rotor, 30-place,
n = 14,000 min⁻¹, RCF 21,255

Cat.-No. **1689**
aerosol-tight [2]

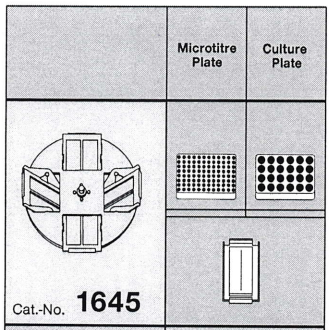

Cat.-No.	4345
plates per rotor	4
RCF	1,896
radius in mm	106
run-up in sec	44
run-down in sec	◘ 54 [◯] 815
temperature °C [1]	- 18

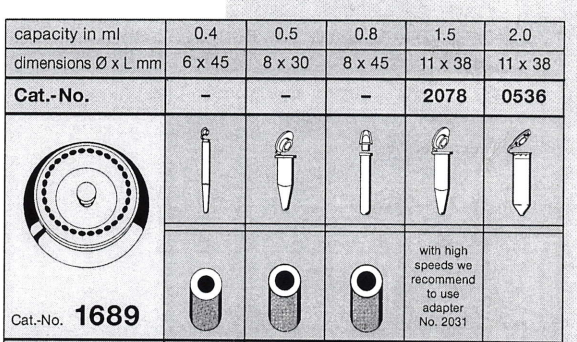

capacity in ml	0.4	0.5	0.8	1.5	2.0
dimensions Ø x L mm	6 x 45	8 x 30	8 x 45	11 x 38	11 x 38
Cat.-No.	–	–	–	**2078**	**0536**
Cat.-No.	**2024**	**2023**	**2023**	–	–
tubes per rotor	30				
RCF	21,255				
radius in mm	97				
run-up in sec	27				
run-down in sec	◘ 34 [◯] 700				
temperature °C [1]	+ 2				

Adapters for additional tubes on request

◘ braked run-down at level 99
[◯] unbraked run-down

[1] Lowest attainable temperature at max. speed in the refrigerated UNIVERSAL 32 R.

[2] In compliance with DIN EN 61010, part 2-020

Save space on the laboratory bench and gain more flexibility

...with trolleys and rolling cabinets for Hettich centrifuges.

All models are of sturdy design and feature large castors and two locks.

Any vibrations of the centrifuge are safely compensated.

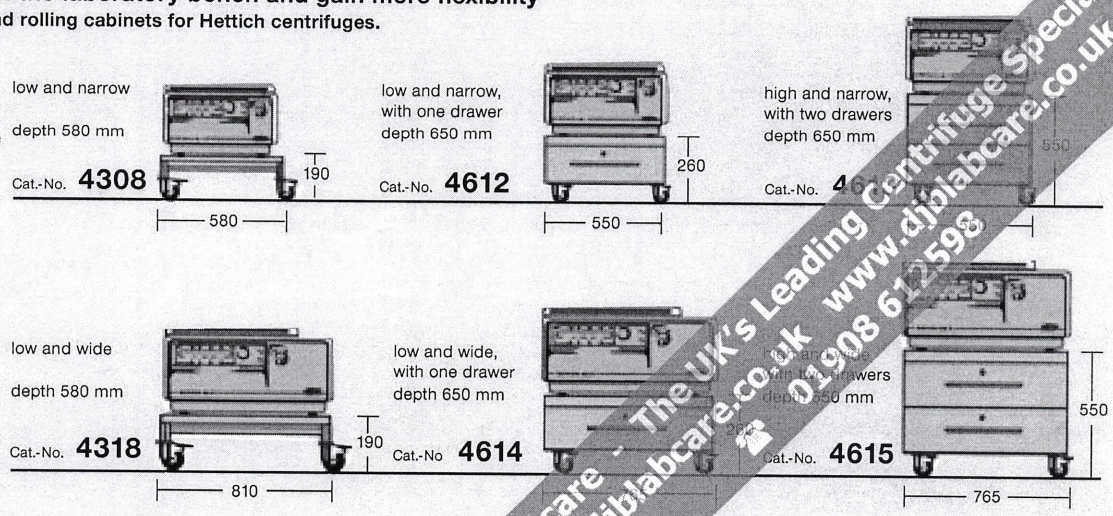

Please take care not to exceed the tubes' max. permissible RCF. For glass tubes the max. RCF is 4,000

DJB Labcare - The UK's Leading Centrifuge Specialist
info@djblabcare.co.uk www.djblabcare.co.uk
01908 612598

Technical Details

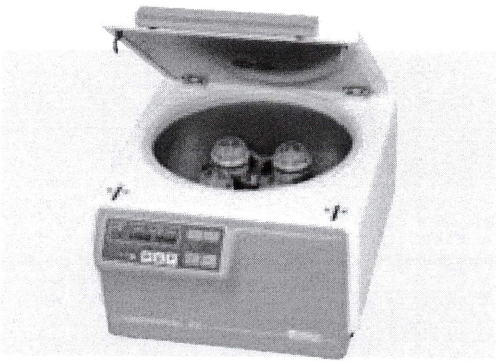

UNIVERSAL 32
Benchtop centrifuge, without rotor
Cat.-No. 1605 **Cat.-No. 1605-01**

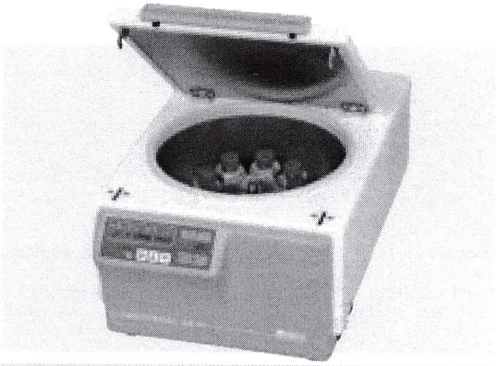

UNIVERSAL 32 R
Benchtop centrifuge, refrig., without rotor
Cat.-No. 1610 **Cat.-No. 1610-01**

Power supply*:	220 - 240 V 1~	110 - 127 V 1~	230 - 240 V 1~	110 - 127 V 1~
Frequency:	50 - 60 Hz	50 - 60 Hz	50 - 60 Hz	60 Hz
Consumption:	400 VA	450 VA	950 VA	1000 VA
Radio interference:	EN 55011 ISM cl. B	FCC class B	EN 55011 ISM cl. B	FCC class B
Immunity:	EN 61000-6-2	–	EN 61000-6-2	–

Capacity:	4 x 100 ml, swing-out rotor
Speed / RCF:	n = 18,000 min^{-1} / RCF 23,907
Centrifuging chamber temperature:	controllable from -20 °C to +40 °C
Running time:	1-99 min, ∞ (continuous run), impulse key (short cycle mode)

Dimensions (HxWxD):	300 x 420 x 490 mm	300 x 420 x 660 mm
Weight:	approx . 24 kg	approx . 46 kg

* other voltages on request

Design
Housing and lid of metal for safety. Panelling finished in a scratch and impact resistant coating. Centrifuging chamber and inner lid of stainless steel. Lid locking, lid holding, and imbalance switch-off are standard.

Andreas Hettich GmbH & Co. KG
Gartenstr. 100 · D-78532 Tuttlingen / Germany
Phone +49 (0)7461 705-0 · Fax +49 (0) 7461 705-122
National Sales (07461) 705-290 · National Service (07461) 705-202
Internat. Sales +49 (0)7461 705-201 · Internat. Service +49 (0)7461 705-203

Hettich ZENTRIFUGEN

www.hettichlab.com · info@hettichlab.com · service@hettichlab.com

1605.1104 me/ga GB © by Hettich Tuttlingen · Printed in Germany · Design, form and colour modifications reserved.

DJB Labcare - The UK's Leading Centrifuge Specialist
info@djblabcare.co.uk www.djblabcare.co.uk 01908 612598